REV.	ECN. NO.	NAME	DATE

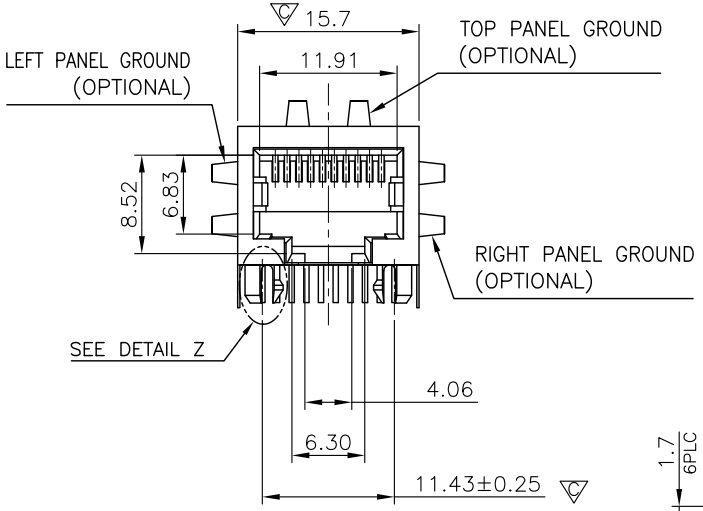

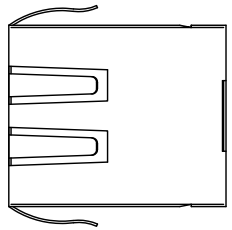

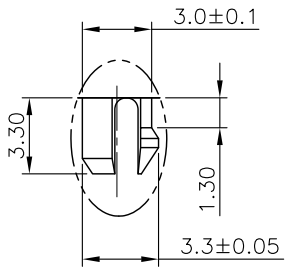

DETAIL Z
SCALE 2:1

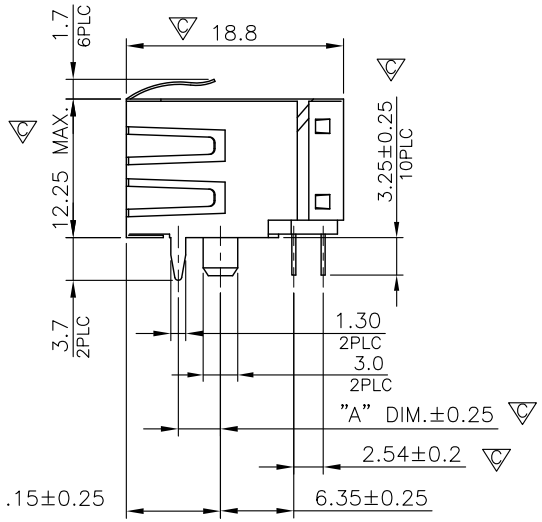

NOTE:

CAVITY CONFIRMS TO FCC RULES AND REGULATIONS PART 68, SUBPART F.

1. MATERIAL:
   1.1 HOUSING & COVER & INSERT HOUSING:
   PBT OR PA46, WITH GLASS FIBER,
   UL94V-0, STANDARD COLOR-BLACK.
   1.2 CONTACTS: PHOSPHOR BRONZE.
   1.3 SHELL: BRASS.

2. FINISH:
   2.1 CONTACTS: GOLD PLATED ON CONTACT AREA,
   GOLD FLASH ON SOLDER TAIL,
   1.27μm [50μ″] MIN. NICKEL
   UNDERPLATED OVERALL.
   2.2 SHELL: 0.508μm [20μ″] MIN. NICKEL PLATED.

3. "C" SHOWS QIP INSPECTION POINT.

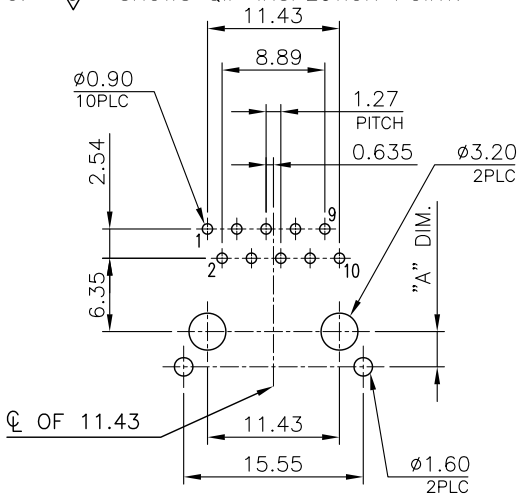

RECOMMENDED PCB LAYOUT

RECOMMENDED PCB THICKNESS: 1.6mm
TOLERANCE: ±0.05 (TOP VIEW)

ROHS COMPLIANT

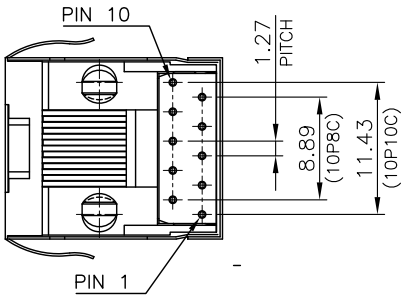

TOLERANCE UNSPECIFIED . .0 ±0.38 .00 ±0.25 .000 ±0.10 ANGLE ±3.00° MANUFACTURING COPY		VITALCONN a vital connector company		FOR YOUR VITAL CONNECTION	
		TITLE: 10POSITION, FLAT PIN, WITH SHELL, VERY LOW PROFILE, SIDE ENTRY PCB JACK			
DRAWN BY:	BECKER	PART NO:	JD118103D401		REV: A
CHECKED BY:	VTA	SIZE: A4	UNIT: mm	SHEET:1OF1	FCN: B8
APPROVED BY:	QPF	PROJECTION		http://www.vitalconn.com	