REV.	ECN. NO.	NAME	DATE

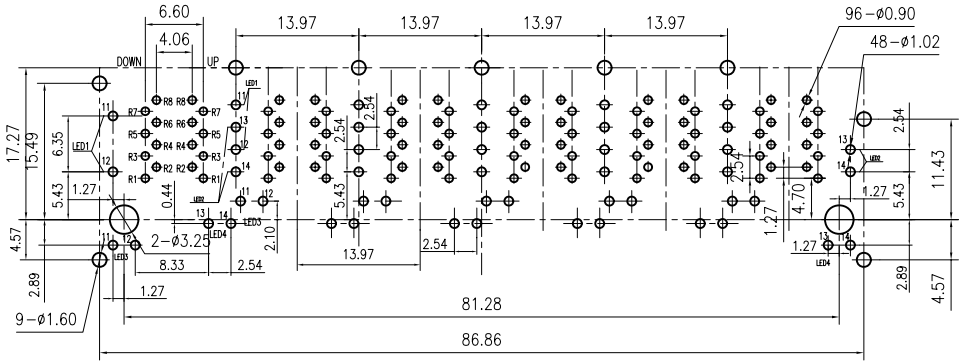

PCB BOARD LAYOUT

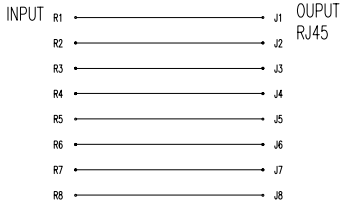

连线规则

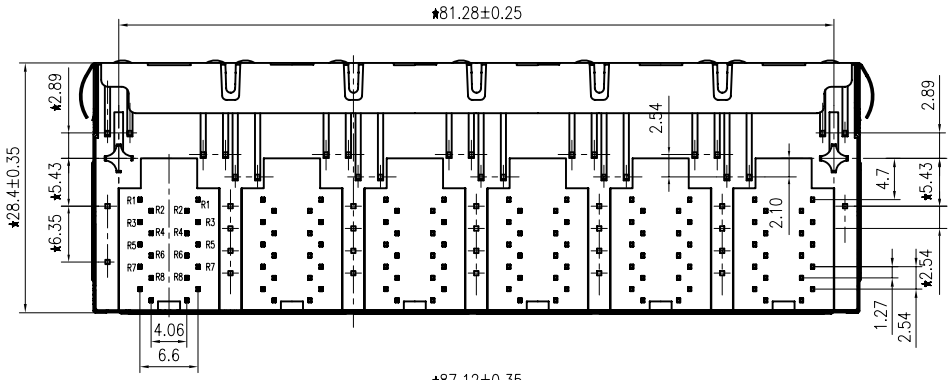

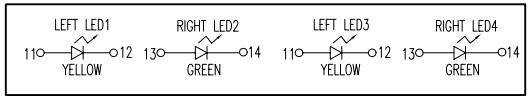

LED Specification

Standard LED Color	LED Wavelength	Forward (V MAX)	Typical (V TYP)	Luminous Intensity
Green	560-580 nm	2.5V	2.1-2.2V	9-25 MCD
Yellow	580-610 nm	2.5V	2.1-2.2V	9-30 MCD
Orange	580-610 nm	2.5V	2.1-2.2V	50-100 MCD

1. LED intensity/wavelength measured with Photo Research PR-650 Colormeter
2. With a forward current of 20 mA,Absolute Maximum Ratings (Ta=25℃)

1:TOLERANCES UNLESS OTHERWISE SPECIFIED :
0~10±0.15、10~20±0.2、20~40±0.25、
40~70±0.3、≥70±0.4
2:JACK CAVITY CONFORMS TO FCC RULES AND REGULATIONS,PART 68 SUBPART F.

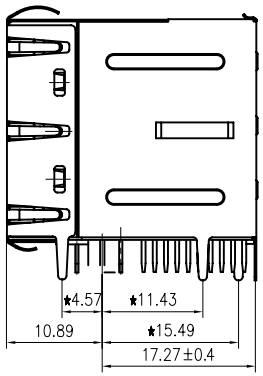

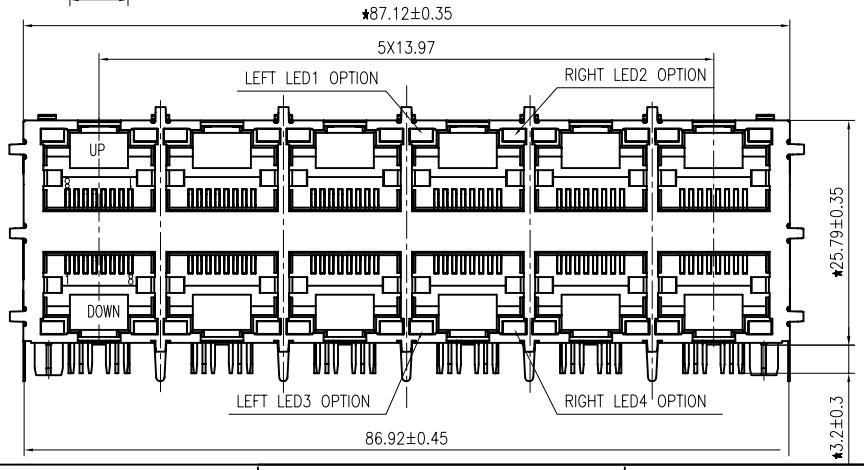

TOLERANCE UNSPECIFIED
.
.0 ±0.38
.00 ±0.25
.000 ±0.10
ANGLE ±3.00°
MANUFACTURING COPY

VITALCONN
a vital connector company

FOR YOUR VITAL CONNECTION

TITLE: RJ45 Modular Jack 2X6 W/LED, Shielded

DRAWN BY:	BECKER	PART NO:	JS261112DPA3		REV: A
CHECKED BY:	VTA	SIZE: A4	UNIT: mm	SHEET:1OF1	FCN: A3
APPROVED BY:	QPF	PROJECTION		http://www.vitalconn.com	

ROHS COMPLIANT