REV:	ECN. NO.	NAME	DATE

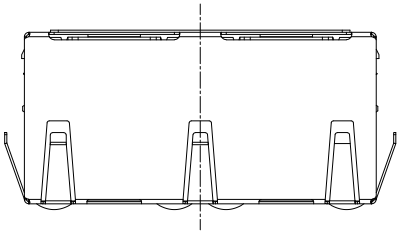

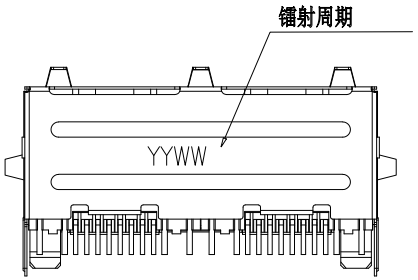

BACK VIEW

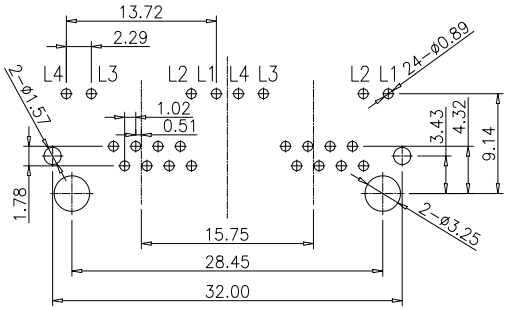

PCB LAYOUT TOLERANCE:±0.05
TOP VIEW

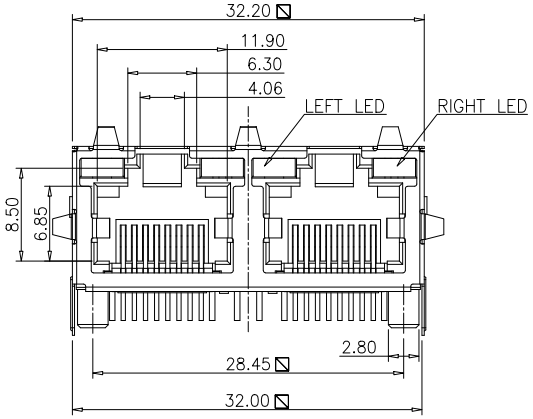

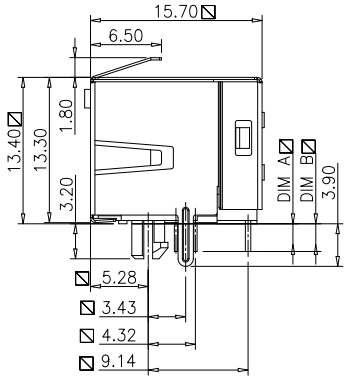

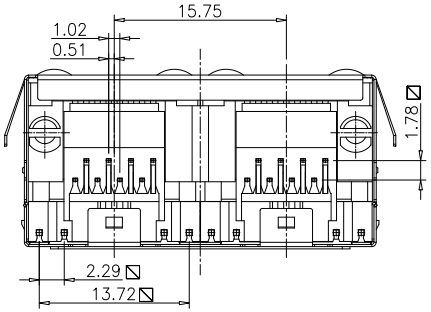

LED SCHEMATIC:

LEFT LED1:
LEFT LED2:

RIGHT LED1:
RIGHT LED2:

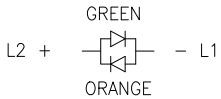

NOTES:
1. MATERIAL:
   HOUSING: HIGH TEMP. THERMOPLASTIC, UL 94V-0, BLACK.
   CONTACT: PHOSPHOR BRONZE,T=0.30mm,
   50u"MIN NICKEL UNDERPLATE ON ALL AREA,
   100u"MIN TIN TERMINATION END,
   GOLD ON CONTACT AREA.
   SHELL: T=0.20mm COPPER ZINC ALLOY PLATED WITH NICKEL
2. OPERATING TEMPERATURE: -40℃ ~ +85℃
3. JACK CAVITY CONFORMS TO FCC RULES AND REGULATIONS PART 68, SUBPART F

GENERAL TOLERANCE .X± 0.38 X.°± 2° .XX± 0.25 .X°± 1° .XXX± 0.13		VITALCONN a vital connector company	FOR YOUR VITAL CONNECTION		
		TITLE:	RJ45 CONNECTOR 1*2 PORT W/LED, 8P8C,Shielded		
DRAWN BY:	Zou Long	PART NO:	JU1241R3DNH1		REV: A
CHECKED BY:	Bob	SIZE: A4	UNIT:mm	SHEET:1 OF 1	FCN: H1
APPROVED BY:	QPF	PROJECTION		http://www.vitalconn.com	

For technical support, please send an email to support@vitalconn.com